INSTRUCTION SHEET

BER0073 (84") - BER0074 (94")

UPDATE KIT FOR 84"-94"DRIVE SHAFT

APPLICATION: B84A, B94A snowblowers

INSTALLATION

1. **Figure 1:** Loosen the idler bolt (item 1). Remove the chain taking care to remember its course and the orientation of the coupling link lock.
2. **Figure 1:** Remove the drive shaft (item 2) by unscrewing the three bolts and nuts (items 3-4).
3. **Figure 2:** Cut a hole on the side to the indicated dimensions and four other 13/32" holes.

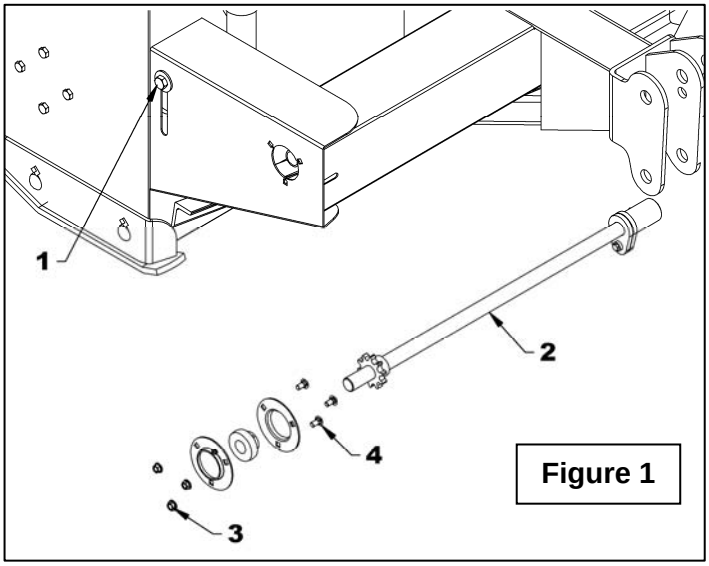

Figure 1

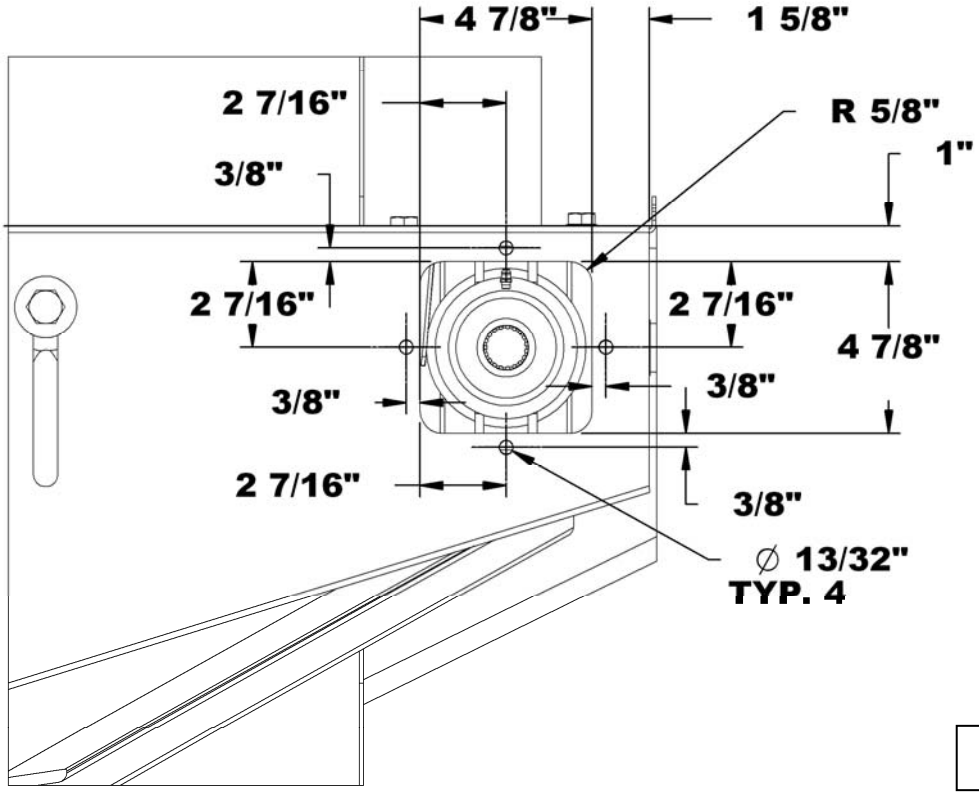

Figure 2

4. **Figure 3:** To create an access to the shear bolt, draw lines to the dimensions shown on figure. Cut the draw part and break the sharp corners with a file to avoid possible injury. Drill two 11/32" holes in places shown on figure.

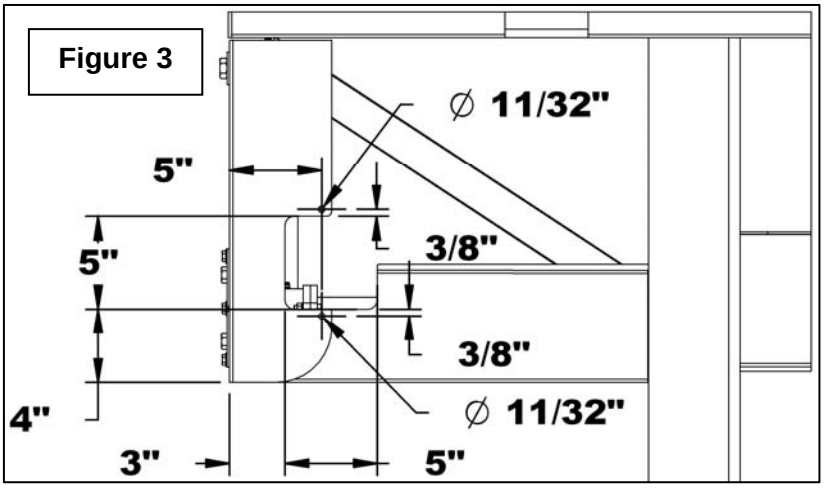

5. **Figure 4:** Weld a 5/16"NC hex nut under the plate in the rear hole.

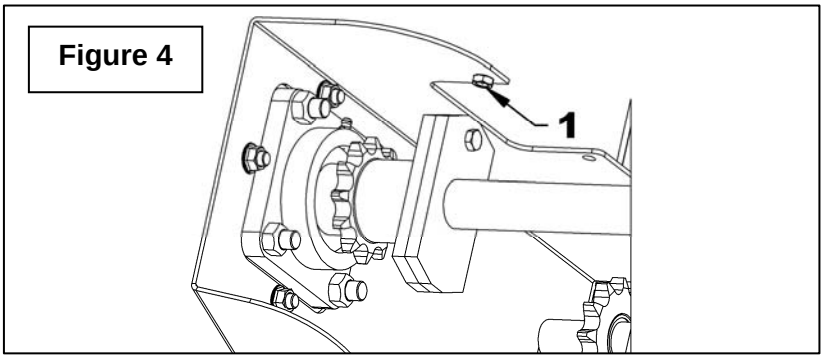

6. **Figure 5:** Assemble the plate (item 1) to the bearing and driving shaft already pre-assembled (item 2) with the four 1/2"NC x 1 1/2" bolts and hex nuts (items 3-4).

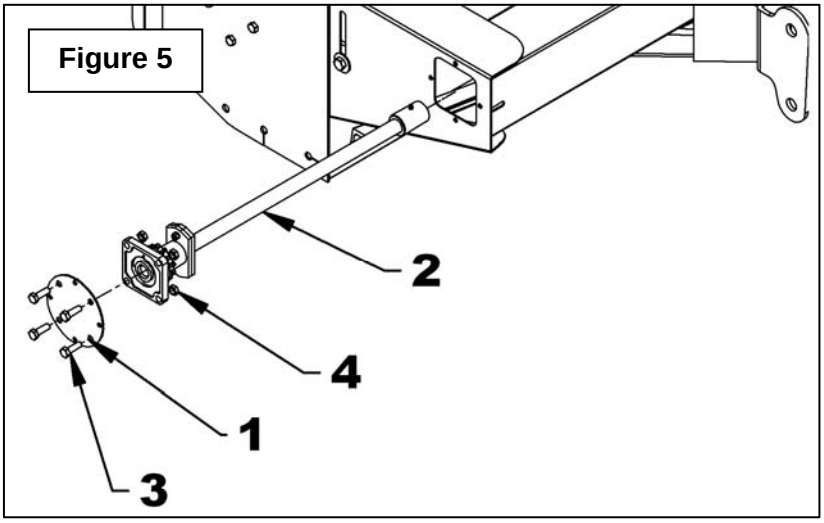

7. **Figure 6:** Install the pre-assembled plate (item 1) aligning it with the splined shaft of the gearbox and secure with the four serrated flange bolt 3/8" NC x 3/4" lg. Tighten to 20 lbs-ft (27 N-M).
8. Install the new chain and secure with the opening of the coupling link oriented in the opposite direction of the rotation.

   NOTE: It is possible that the provided 94 links chain is too long. Adjust the length by placing the idler bolt as higher as possible in the oblong hole.

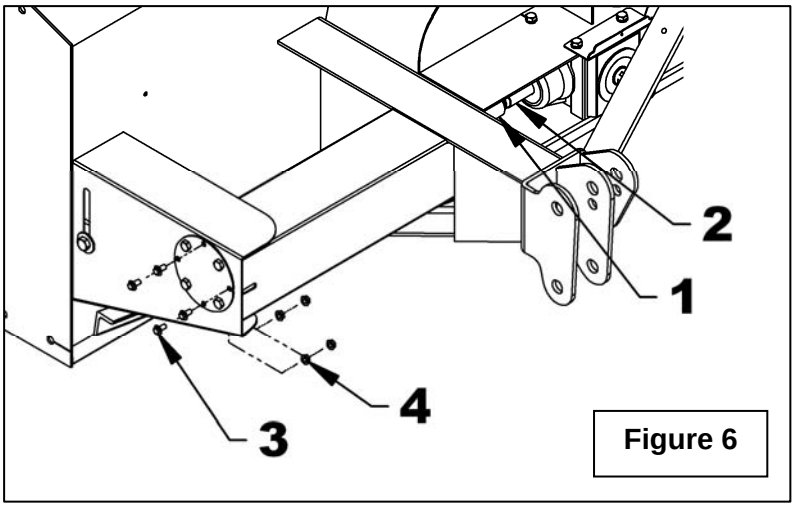

Figure 6

9. **Figure 7:** Install a nylon flat washer (item 1), the access plate (item 2), the other nylon flat washer (item 3) and a 5/16"NC x 1" lg hex bolt (item 4) over the plate. Attach with a 5/16"NC nylon insert locknut (item5) as shown. Attach the access plate (item 2) with a 5/16" knob (item 6).

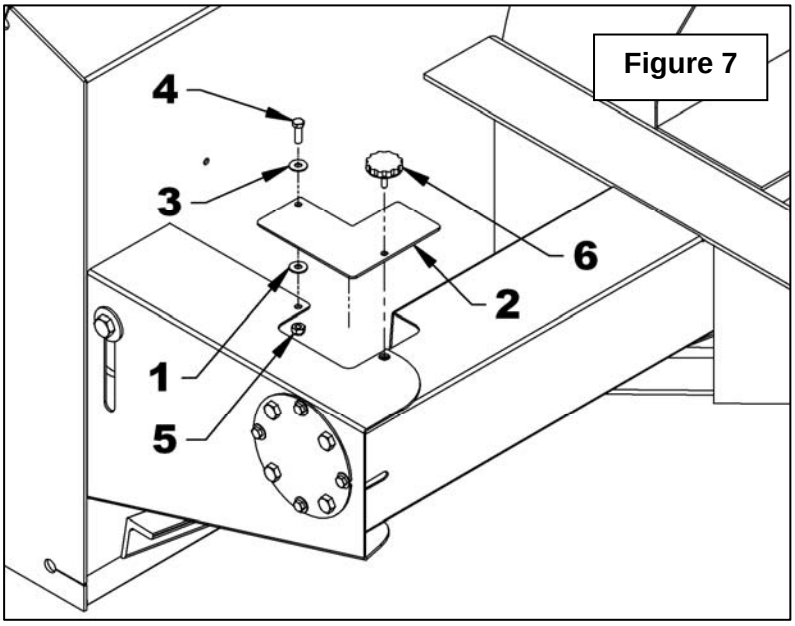

Figure 7

BER0073 (84") - BER0074 (94")

UPDATE KIT FOR 84"-94"DRIVE SHAFT

PARTS
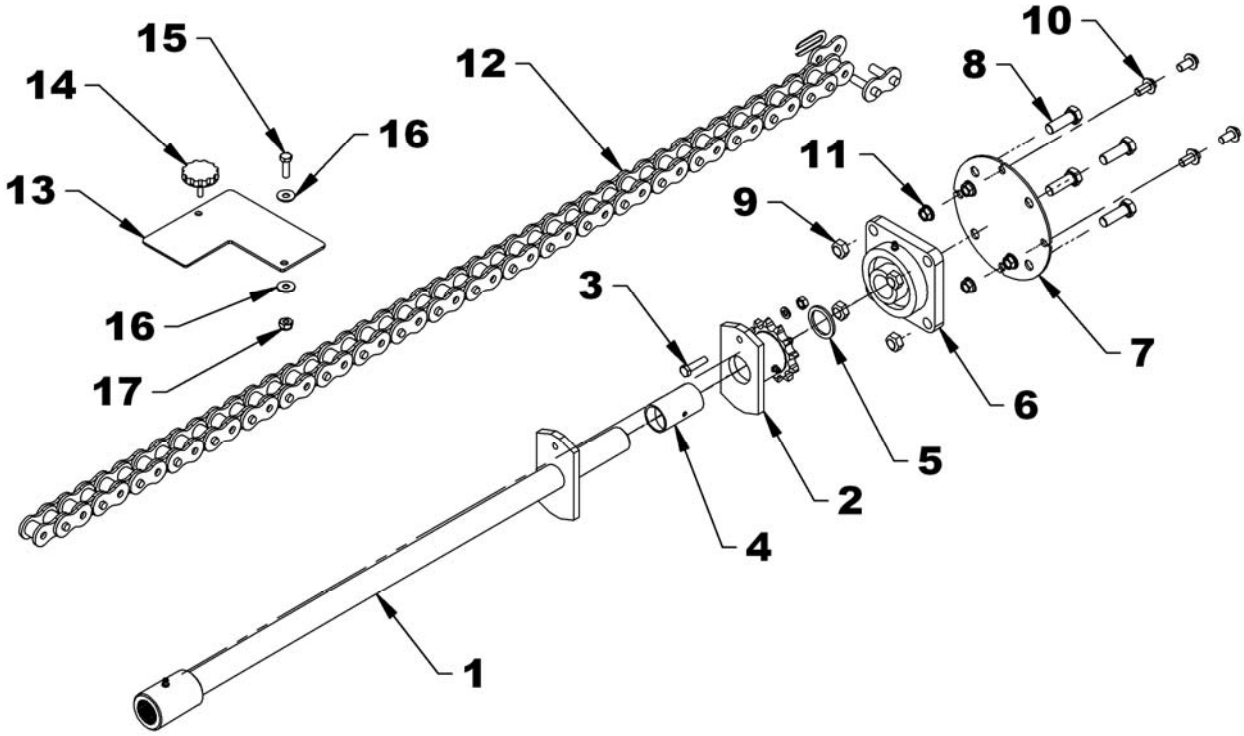
REF.	DESCRIPTION	QTY	PART # B84A	PART # B94A
1	Driving shaft	1	669621	669622
2	Shear plate	1	669344	669344
3	Hex. bolt 5/16" NC x 1 3/4", lock washer, nut, PTD	1	669345	669345
4	Oilite bushing 1 1/2" lg.	1	4300072	4300072
5	Spacer ring 1/8"	1	669256	669256
6	Bearing 1 1/4", 4 holes with 2 grease fitting	1	4300001	4300001
7	Driving shaft support	1	669356	669356
8	Hex. bolt 1/2 NC x 1 1/2", gr. 5, PTD	1	0100070	0100070
9	Nut, Stover 1/2" NC, PTD	1	11100006	1100006
10	Serrated flange bolt 3/8"NC x 3/4"lg, PTD	4	0200066	0200066
11	Serrated flange nut 3/8"NC, PTD	4	0900035	0900035
12	Chain #60H x 94 links (incl. connecting link)	1	655788	655788
13	Access plate	1	669638	669638
14	Knob 5/16"	1	661832	661832
15	Hex. bolt 5/16" NC x 1", gr. 5, PTD	1	0100019	0100019
16	Nylon flat washer 11/32"	2	658467	658467
17	Nylon insert locknut 5/16" NC	1	1000005	1000005